FUTEK MODEL LSB353

3mV/V S-BEAM LOAD CELL IN TENSION AND COMPRESSION

(Previously L2362/L2363)

Drawing Number: FI1077-A	
INCH [mm]	R.O.= Rated Output

WIRING CODE (WC4)			
+Excitation	-Excitation	+Signal	-Signal
RED	BLACK	GREEN	WHITE
+SENSE	-SENSE	Shielded	
ORANGE	BLUE	Grounded	

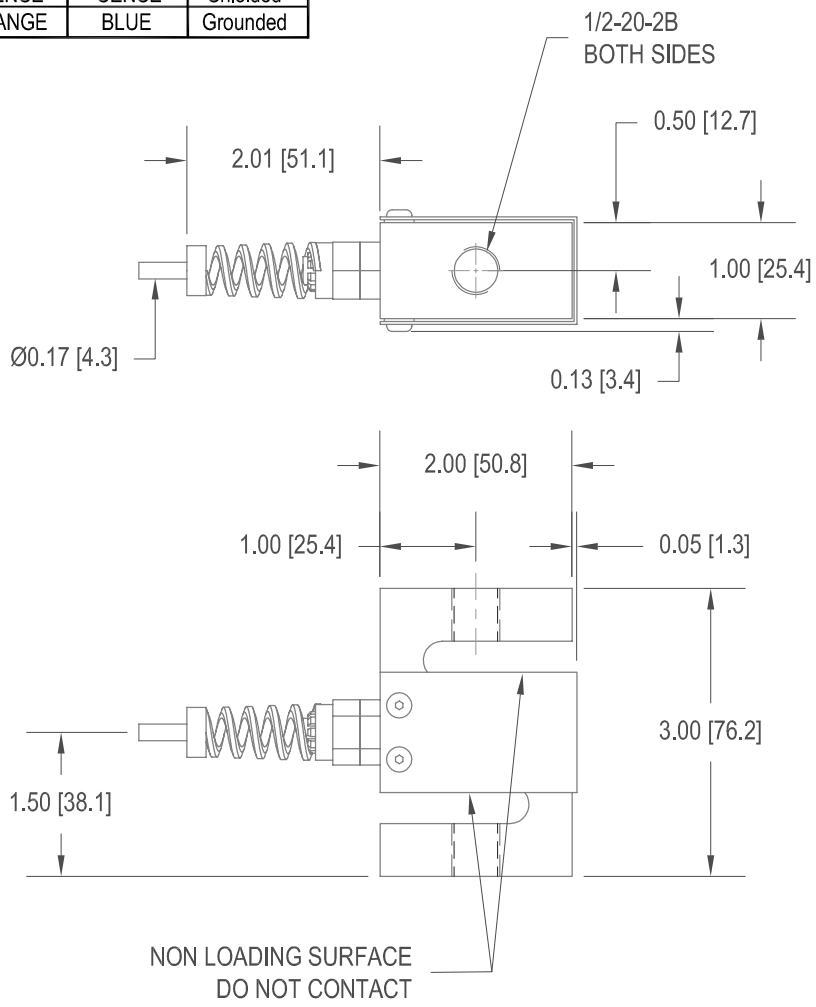

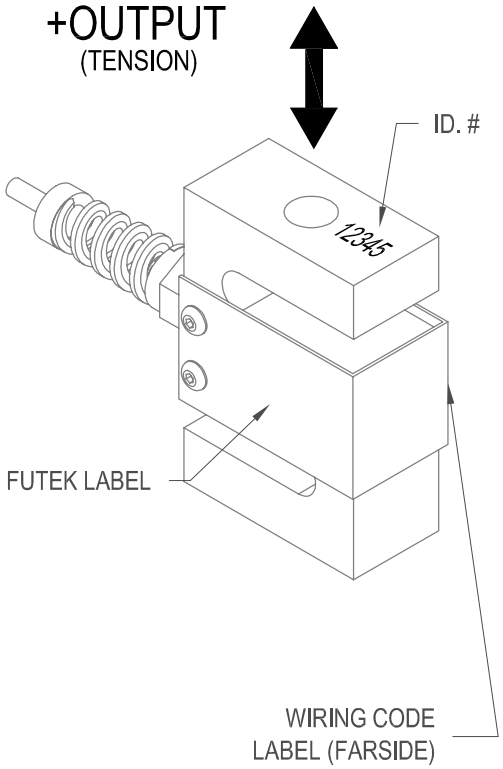

	CAPACITIES	
STK#	lb	N
FSH02096	500	2224
FSH02097	1000	4448
FSH02098	2000	8896
FSH02099	3000	13340

SPECIFICATIONS:

RATED OUTPUT	*3 mV/V nom. (Matched Output Optional)*
SAFE OVERLOAD	*150% of R.O.*
ZERO BALANCE	*±1% of R.O.*
EXCITATION (VDC OR VAC)	*18 MAX*
BRIDGE RESISTANCE	*350Ω nom.*
NONLINEARITY	*±0.05% of R.O.*
HYSTERESIS	*±0.05% of R.O.*
NONREPEATABILITY	*±0.01% of R.O.*
TEMP. SHIFT ZERO	*±0.001% of R.O./°F [0.0018% of R.O./°C]*
TEMP. SHIFT SPAN	*±0.0008% of LOAD/°F [0.0014% of LOAD/°C]*
COMPENSATED TEMP.	*60 to 160°F [15 to 72°C]*
OPERATING TEMP.	*-40 to 200°F [-40 to 93°C]*
MATERIAL	*17-4 PH S.S.*

CABLE: #28 AWG, 6 Conductor, Spiral Shielded Polyurethane Cable 5 ft [1.5m] Long

ACCESSORIES AND RELATED INSTRUMENTS AVAILABLE

CALIBRATION (STD)	*5 pt.TENSION; 43.575KΩ SHUNT CAL. VALUE*
CALIBRATION (AVAILABLE)	*COMPRESSION*
CALIBRATION TEST EXCITATION	*10 VDC*

FUTEK
ADVANCED SENSOR TECHNOLOGY, INC.

This drawing is submitted solely for the information and exclusive use of the original addressee. It is not to be divulged in whole or in part, by any firm or individual without written permission from FUTEK

10 THOMAS
IRVINE, CA 92618 USA
1-800-23-FUTEK (38835)

INTERNET:
http://www.futek.com