FUTEK MODEL QLA106 *DONUT / THRU HOLE LOAD CELL*

STOCK NUMBER: QSH00024

INCH (mm)	R.O.= Rated Output

WIRING CODE			
+Excitation	-Excitation	+Signal	-Signal
RED	BLACK	GREEN	WHITE

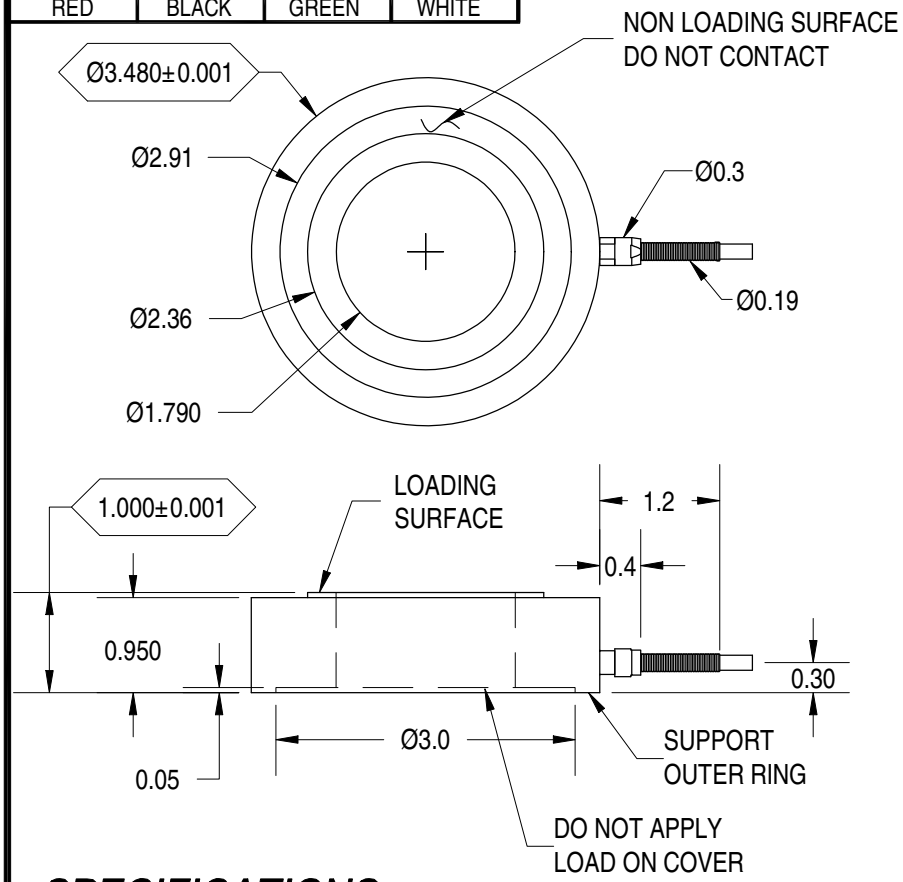

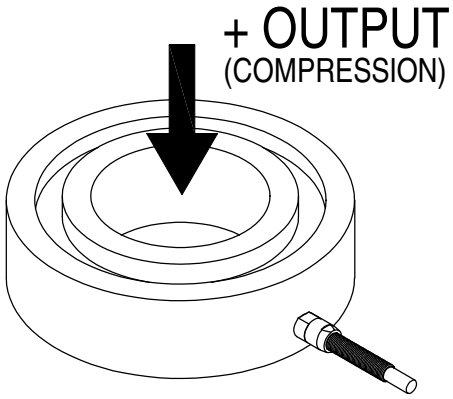

SPECIFICATIONS:

RATED OUTPUT	*2 mV/V ±1%*
CAPACITY	*30000 lb*
SAFE OVERLOAD	*150% of R.O.*
ZERO BALANCE	*±3% of R.O.*
EXCITATION (VDC OR VAC)	*18 MAX*
BRIDGE RESISTANCE	*700 Ωnom*
NONLINEARITY	*±0.5% of R.O.*
HYSTERESIS	*±0.5% of R.O.*
NONREPEATABILITY	*±0.5% of R.O.*
TEMP. SHIFT ZERO	*±0.02% of R.O./°F*
TEMP. SHIFT SPAN	*±0.02% of LOAD/°F*
COMPENSATED TEMP.	*60 to 160°F*
OPERATING TEMP.	*-60 to 200°F*
WEIGHT	*1.5 lb*
MATERIAL	*STAINLESS STEEL*

CABLE: 24 AWG, 4 Conductor Braided Shielded Teflon Cable, 10 ft Long

NOTE:

WHILE TORQUING BOLTS, HIGH TENSION FORCES WILL OCCUR DURING INSTALLATION, WHICH COULD RESULT IN OVERLOADING THE SENSOR. FUTEK RECOMMENDS CONNECTING SENSOR TO A SYSTEM IN ORDER TO MONITOR THE APPLIED FORCES. FUTEK IN NOT LIABLE OR RESPONSIBLE FOR THE MISHANDLING OF THE SENSOR DURING INSTALLATION.

MATERIAL: —

HEAT TREATMENT - FINISH: —

REVISIONS: (Refer to dwg # revision sheet)

△ -

OUTLINE DRAWING

STANDARD NOTES: (Unless Otherwise Specified)

- ALL DIMENSIONS ARE IN INCHES
- DRAWING INTERPRETATION DIMS. PER ASME-Y14.5M
- SURFACE FINISH 63 OR BETTER
- REMOVE BURRS AND BREAK SHARP EDGES .005 - .015
- THREADS PER HANDBOOK H-28
- DIMENSIONS ARE SHOWN AFTER PLATING
- CRITICAL DIMENSION

3rd ANGLE PROJ.

ANGLE: ±1/2°

CHAMFER: ±5°

TOLERANCE:
.X ±0.1"
.XX ±0.01"
.XXX ±0.005"
.XXXX ±0.001"

This drawing is submitted solely for the information and exclusive use of the original addressee. It is not to be divulged in whole or in part, by any firm or individual without written permission from:

FUTEK
ADVANCED SENSOR TECHNOLOGY, INC.
10 THOMAS
IRVINE, CA 92618 USA
Phone: (949) 465-0900
Fax: (949) 465-0905

CAGE: 1X8M6

MODEL:	QLA106	DWG No.:	FO1226
DRAWN BY:	T.LEE	STOCK No:	—
APPROVED BY:	R.WALKER	DATE:	Oct.10,2008