FUTEK MODEL TAT300

Reaction Torque Sensor – Screw Driver

(Previously T5165)

Drawing Number: FI1140-B			
INCH [mm]	R.O.= Rated Output		
WIRING CODE (WC4)			
+Excitation	-Excitation	+Signal	-Signal
RED	BLACK	GREEN	WHITE
+Sense	-Sense	Shield	
ORANGE	BLUE	Grounded	

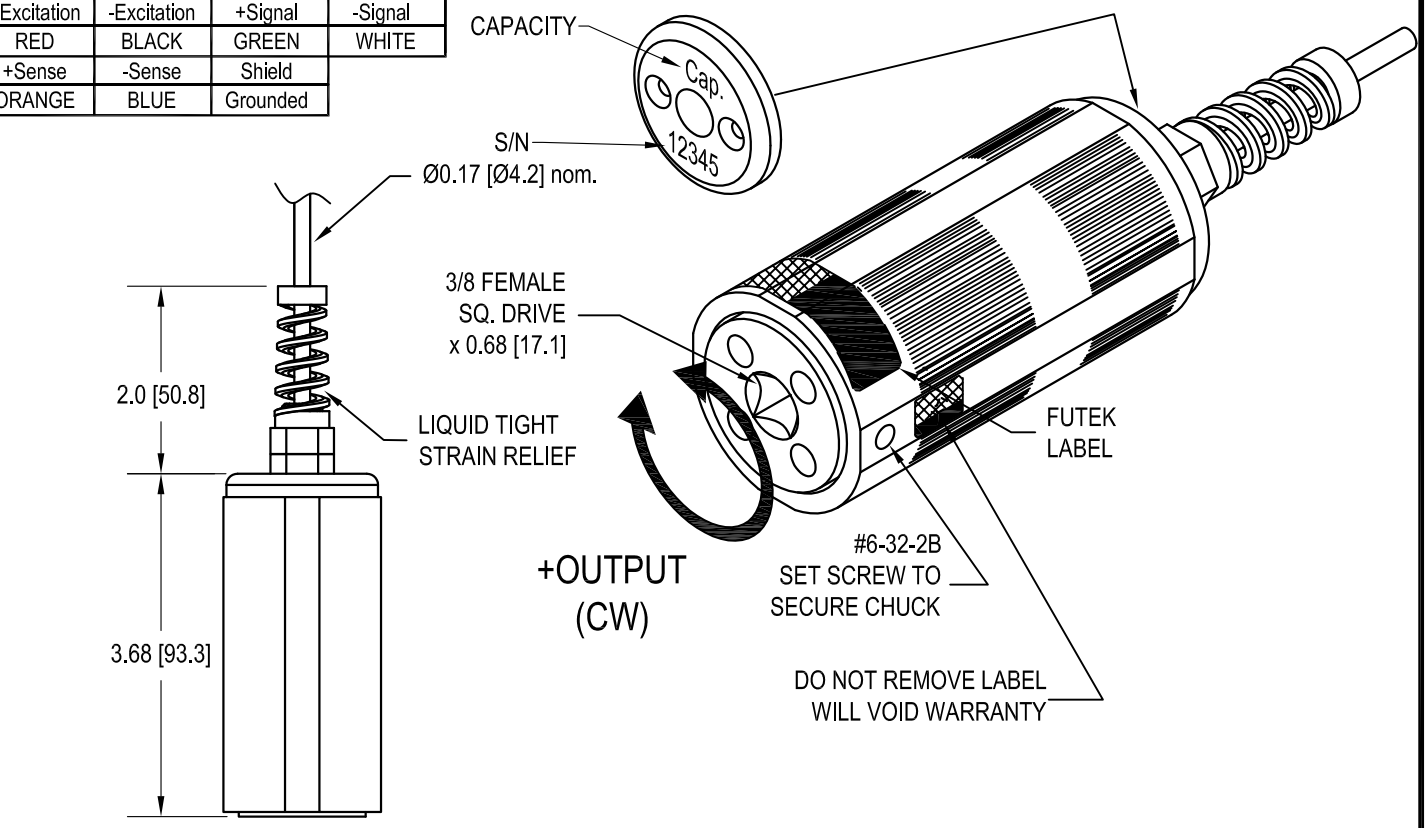

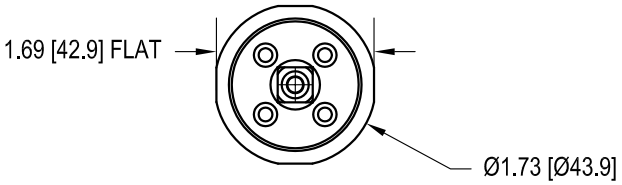

ITEM#	CAPACITY		TORSIONAL STIFFNESS
FSH00641	50 in-oz*	300 mNm	3300 in-oz/rad
FSH00642	12 in-lb*	1.5 Nm	1000 in-lb/rad
FSH00643	50 in-lb	6 Nm	9400 in-lb/rad
FSH00644	100 in-lb	12 Nm	13200 in-lb/rad

*with Overload Protection

REMOVABLE CHUCK ASSEMBLY OPTIONAL ACCESSORY

ITEM# FSH00619 - 1/16-3/8 DIA. CHUCK
6.3 oz [179 g] (NOT INCLUDED)

ITEM# FSH00618 - 5/64 -1/2 DIA. CHUCK
12.1 oz [343 g] (NOT INCLUDED)

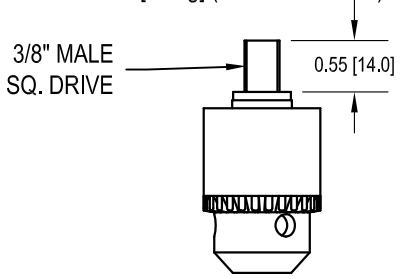

SPECIFICATIONS:

RATED OUTPUT	*2 mV/V nom.*
SAFE OVERLOAD	*150% of R.O.*
ZERO BALANCE	*±2% of R.O.*
EXCITATION (VDC OR VAC)	*18 MAX*
BRIDGE RESISTANCE	*1000 Ω nom.*
NONLINEARITY	*±0.2% of R.O.*
HYSTERESIS	*±0.2% of R.O.*
NONREPEATABILITY	*±0.05% of R.O.*
TEMP. SHIFT ZERO	*±0.002% of R.O./°F [0.0036% of R.O./°C]*
TEMP. SHIFT SPAN	*±0.002% of LOAD/°F [0.0036% of LOAD/°C]*
COMPENSATED TEMP.	*60 to 160 °F [15 to 72 °C]*
OPERATING TEMP.	*-40 to 180°F [-40 to 82°C]*
WEIGHT	*11 oz [312 g] WITHOUT CHUCK*
MATERIAL	*BLACK ANODIZED ALUMINUM*

CABLE: #28 AWG, 6 Conductor, Polyurethane Cable 5 ft [1.5 m] Long

ACCESSORIES AND RELATED INSTRUMENTS AVAILABLE

CALIBRATION (STD)	*5 pt. CW; 150KΩ SHUNT CAL VALUE*
CALIBRATION (OPT)	*5pt. CCW*
CALIBRATION TEST EXCITATION	*10 VDC*

FUTEK
ADVANCED SENSOR TECHNOLOGY, INC.

This drawing is submitted solely for the information and exclusive use of the original addressee. It is not to be divulged in whole or in part, by any firm or individual without written permission from FUTEK

10 THOMAS
IRVINE, CA 92618 USA
1-800-23-FUTEK (38835)

INTERNET:
http://www.futek.com